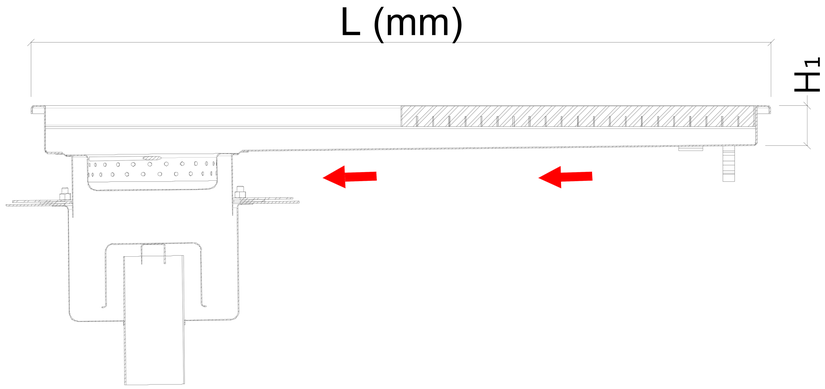

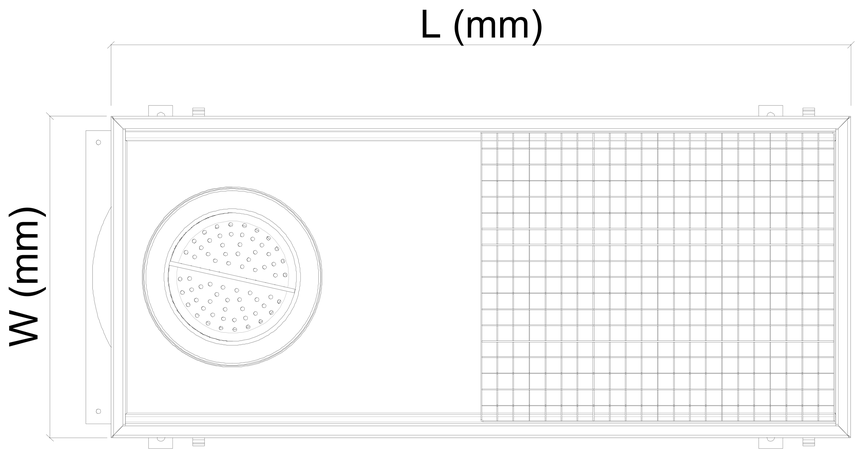

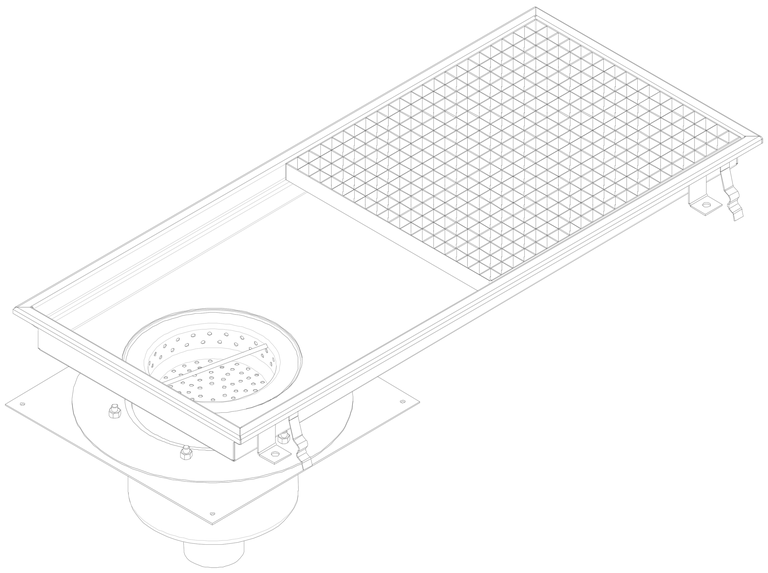

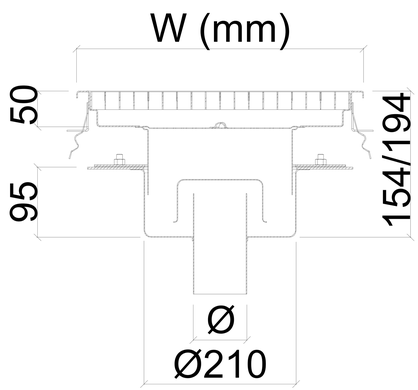

LOW TYPE					
MODEL	W x L	H1-H2	Ø		
			DN50	DN70	DN100
DKAG-49	400 x 921	40-50	Ø50	Ø75	Ø110
DKAG-411	400 x 1183				
DKAG-413	400 x 1364				
DKAG-416	400 x 1625				
DKAG-418	400 x 1805				
DKAG-420	400 x 2068				
DKAG-422	400 x 2248				
DKAG-425	400 x 2510				
Max. Flow Rate lt / min			50	50	70
Waterseal Height			50mm		

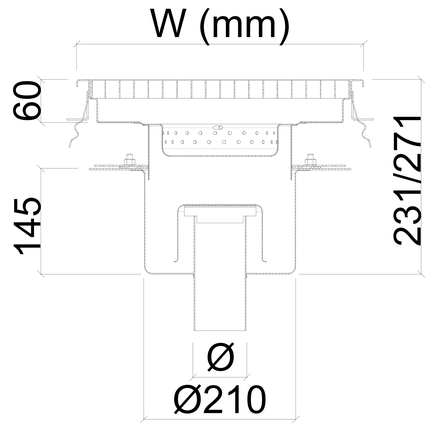

DEEP TYPE					
MODEL	W x L	H1-H2	Ø		
			DN50	DN70	DN100
DKAG-49-D	400 x 921	50-60	Ø50	Ø75	Ø110
DKAG-411-D	400 x 1183				
DKAG-413-D	400 x 1364				
DKAG-416-D	400 x 1625				
DKAG-418-D	400 x 1805				
DKAG-420-D	400 x 2068				
DKAG-422-D	400 x 2248				
DKAG-425-D	400 x 2510				
Max. Flow Rate lt / min			50	50	70
Waterseal Height			60mm		

APPLICATION DRAWING

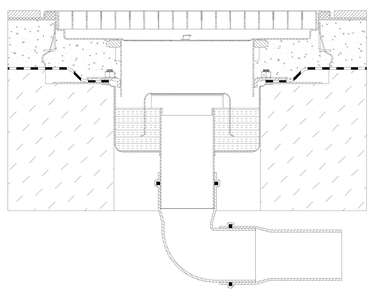

OPTIONAL

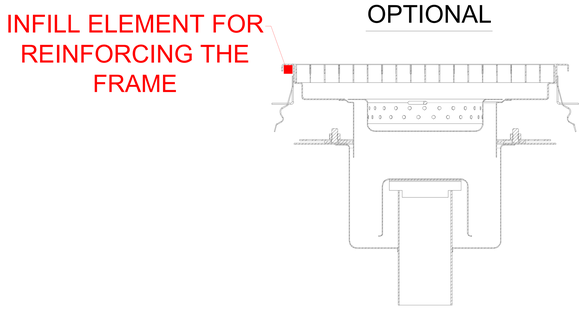

FENICROM®