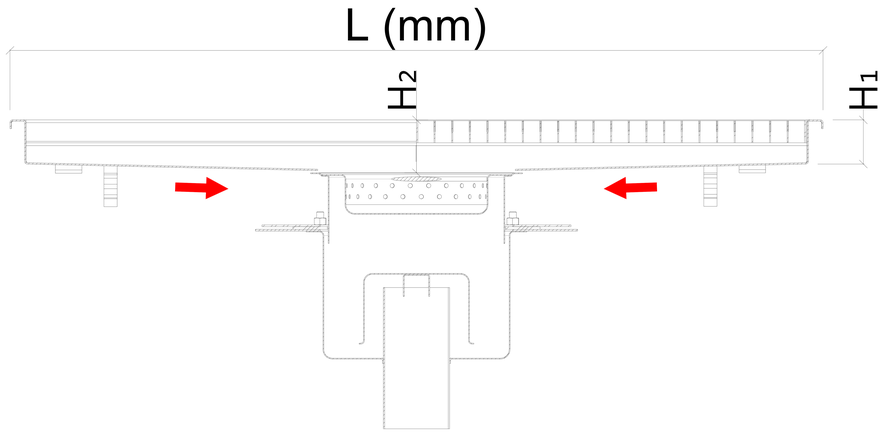

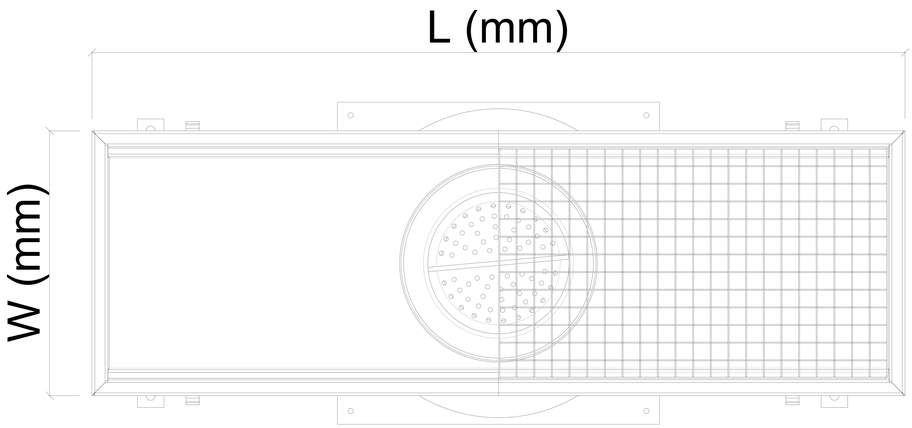

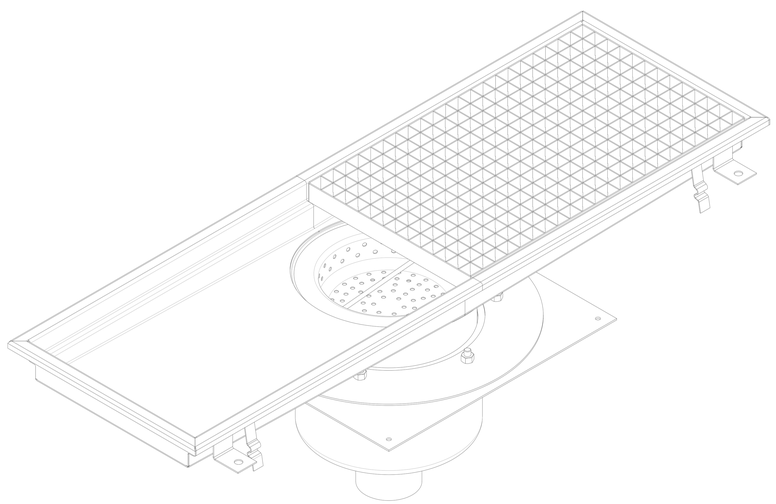

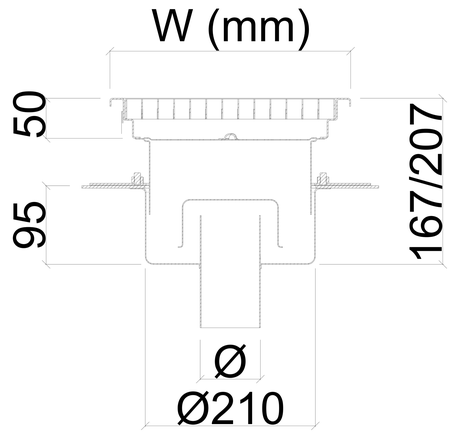

LOW TYPE					
MODEL	W x L	H_1-H_2	Ø		
			DN50	DN70	DN100
DOAG-39	300 x 921	40-50	Ø50	Ø75	Ø110
DOAG-311	300 x 1183				
DOAG-313	300 x 1364				
DOAG-316	300 x 1625				
DOAG-318	300 x 1805				
DOAG-320	300 x 2068				
DOAG-322	300 x 2248				
DOAG-325	300 x 2510				
Max. Flow Rate lt / min			50	50	70
Waterseal Height			50mm		

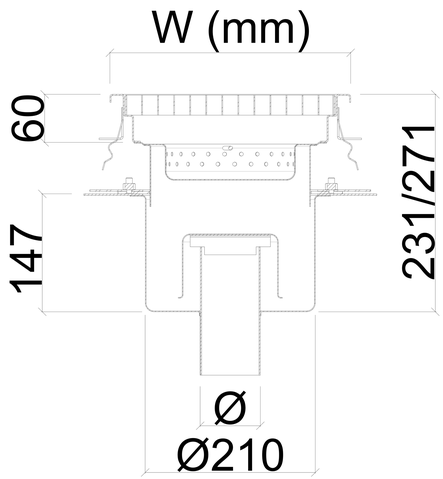

DEEP TYPE					
MODEL	W x L	H_1-H_2	Ø		
			DN50	DN70	DN100
DOAG-39-D	300 x 921	50-60	Ø50	Ø75	Ø110
DOAG-311-D	300 x 1183				
DOAG-313-D	300 x 1364				
DOAG-316-D	300 x 1625				
DOAG-318-D	300 x 1805				
DOAG-320-D	300 x 2068				
DOAG-322-D	300 x 2248				
DOAG-325-D	300 x 2510				
Max. Flow Rate lt / min			50	50	70
Waterseal Height			60mm		

APPLICATION DRAWING

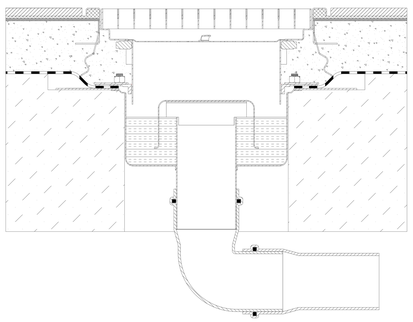

OPTIONAL

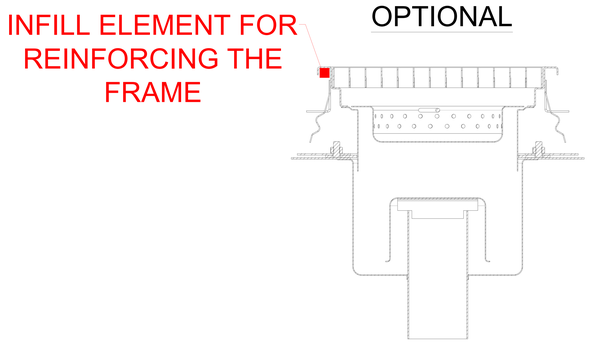

FENICROM®