LOW TYPE			
MODEL	W x L	Ø	
		DN50	DN70
IYG-D-22	209 x 209	Ø50	Ø75
Max. Flow Rate lt / min		50	50
Waterseal Height		50mm	

LOW TYPE				
MODEL	W x L	Ø		
		DN50	DN70	DN100
IYG-D-33	273 x 273	Ø50	Ø75	Ø110
Max. Flow Rate lt / min		50	50	70
Waterseal Height		60mm		

LOW TYPE				
MODEL	W x L	Ø		
		DN50	DN70	DN100
IYG-D-44	373 x 373	Ø50	Ø75	Ø110
Max. Flow Rate lt / min		50	50	70
Waterseal Height		60mm		

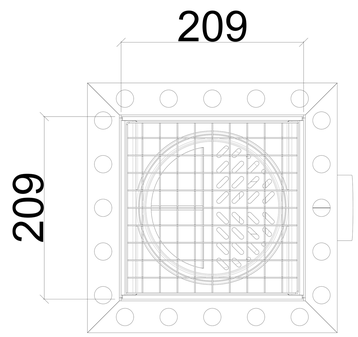

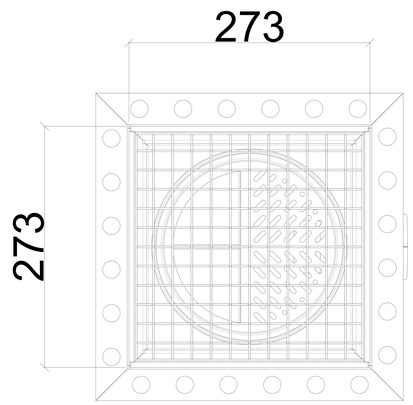

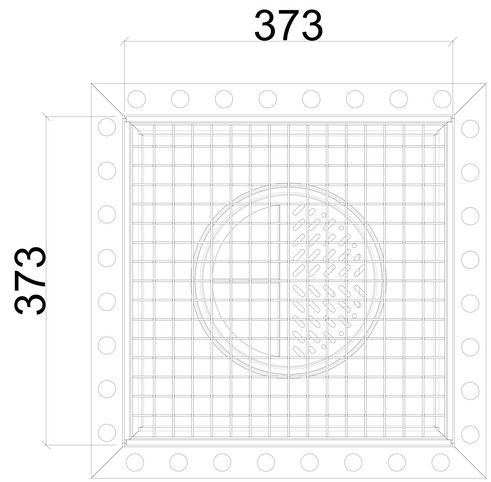

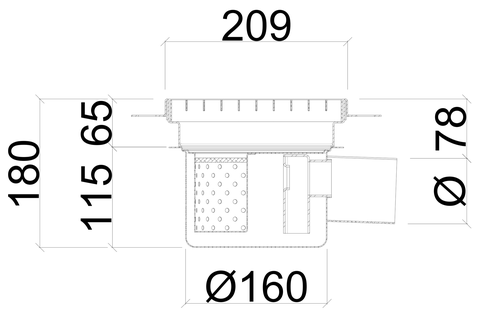

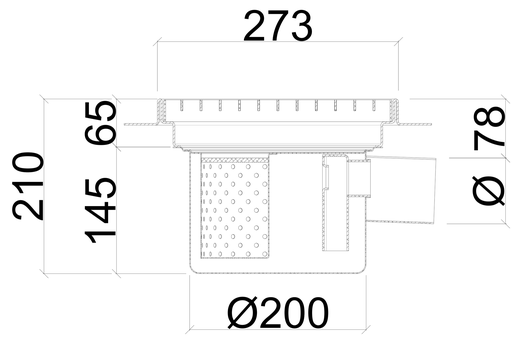

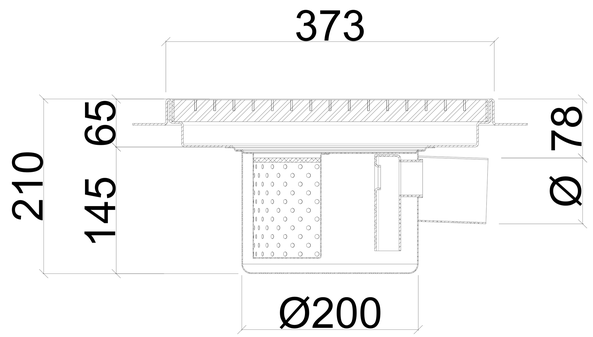

APPLICATION DRAWING

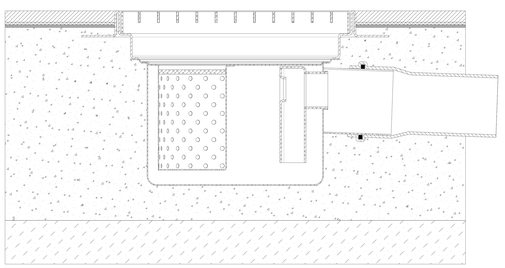

OPTIONAL

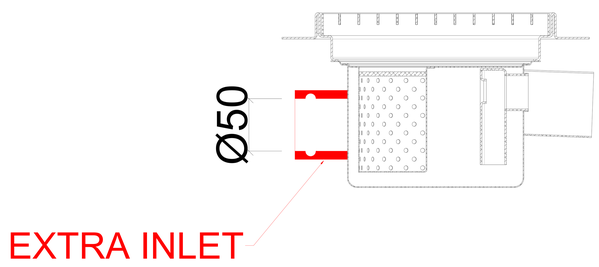

FENICROM®