| LOW TYPE | | | |
|---|---|---|---|
| MODEL | W x L | Ø | |
| | | DN50 | DN70 |
| IYG-22 | 209 x 209 | Ø50 | Ø75 |
| Max. Flow Rate lt / min | | 50 | 50 |
| Waterseal Height | | 50mm | |

| LOW TYPE | | | | |
|---|---|---|---|---|
| MODEL | W x L | Ø | | |
| | | DN50 | DN70 | DN100 |
| IYG-33 | 273 x 273 | Ø50 | Ø75 | Ø110 |
| Max. Flow Rate lt / min | | 50 | 50 | 70 |
| Waterseal Height | | 50mm | | |

| LOW TYPE | | | | |
|---|---|---|---|---|
| MODEL | W x L | Ø | | |
| | | DN50 | DN70 | DN100 |
| IYG-44 | 373 x 373 | Ø50 | Ø75 | Ø110 |
| Max. Flow Rate lt / min | | 50 | 50 | 70 |
| Waterseal Height | | 50mm | | |

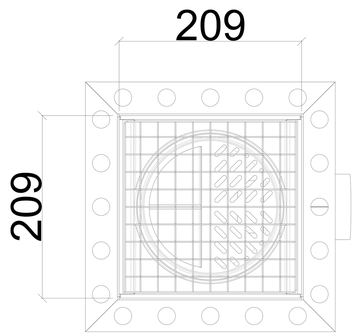


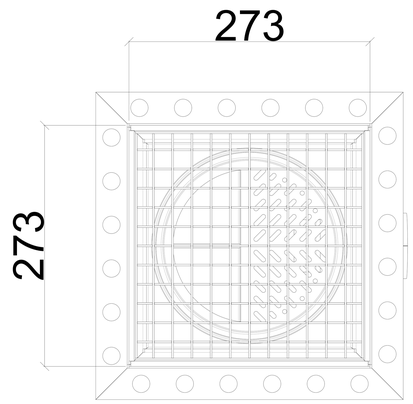


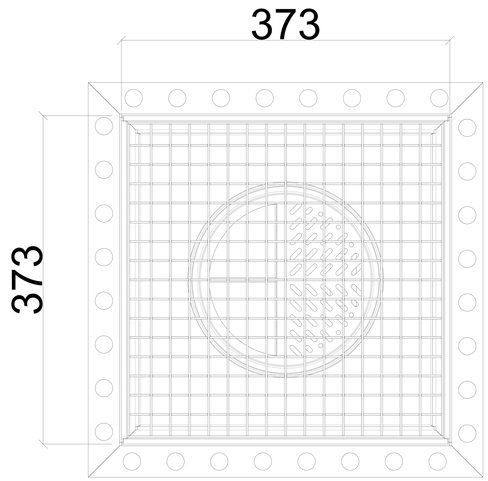


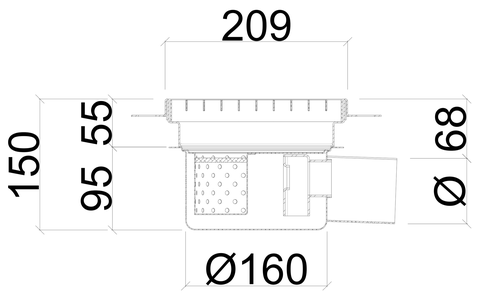


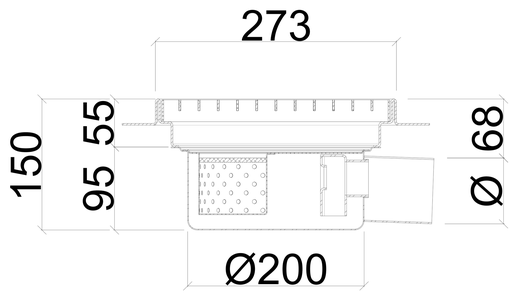


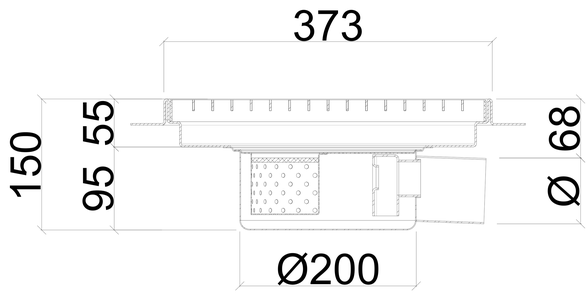


APPLICATION DRAWING

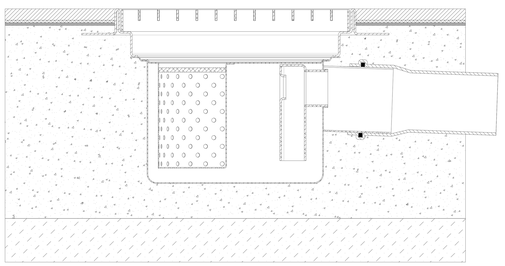

OPTIONAL

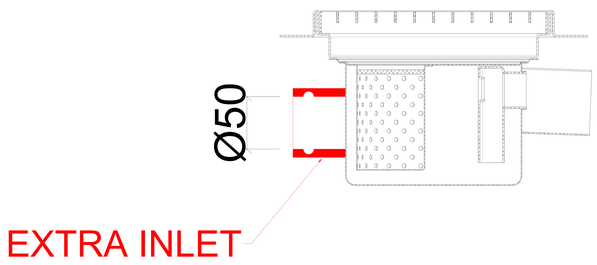


FENICROM®