EXTRA DEEP TYPE				
MODEL	W x L	Ø		
		DN100	DN125	DN150
JTIAG-D-33	276 x 276	Ø110	Ø125	Ø160
Max. Flow Rate lt / min		70	100	125
Waterseal Height		70mm		

EXTRA DEEP TYPE				
MODEL	W x L	Ø		
		DN100	DN125	DN150
JTIAG-D-44	376 x 376	Ø110	Ø125	Ø160
Max. Flow Rate lt / min		70	100	125
Waterseal Height		70mm		

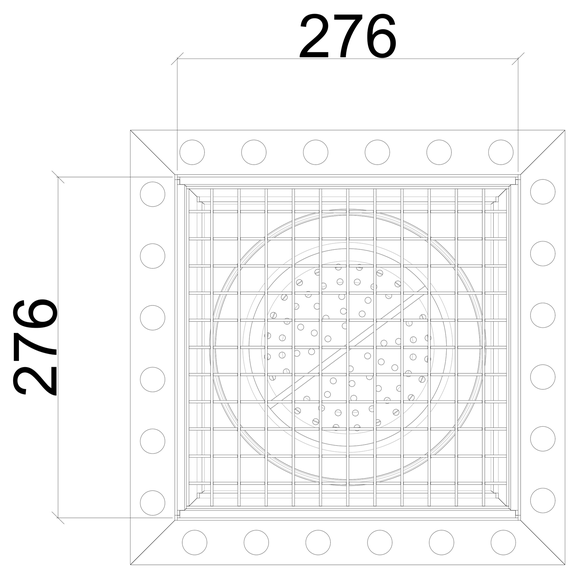

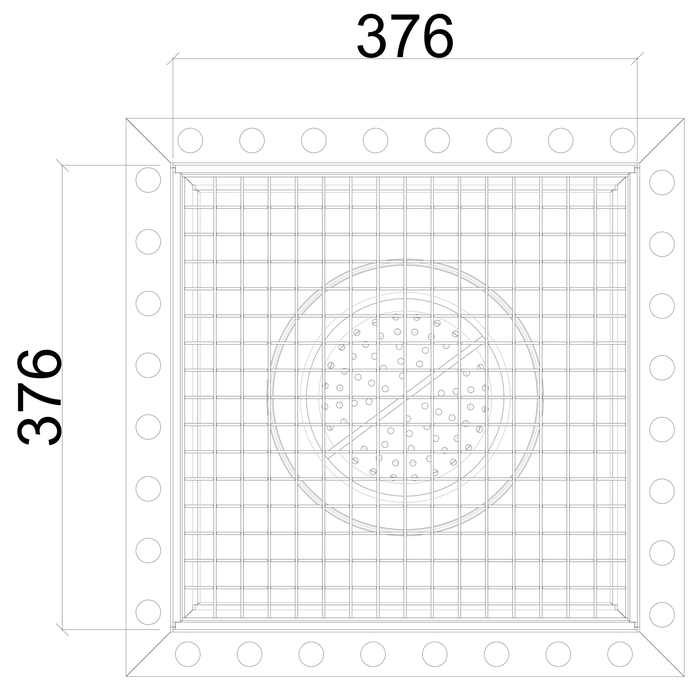

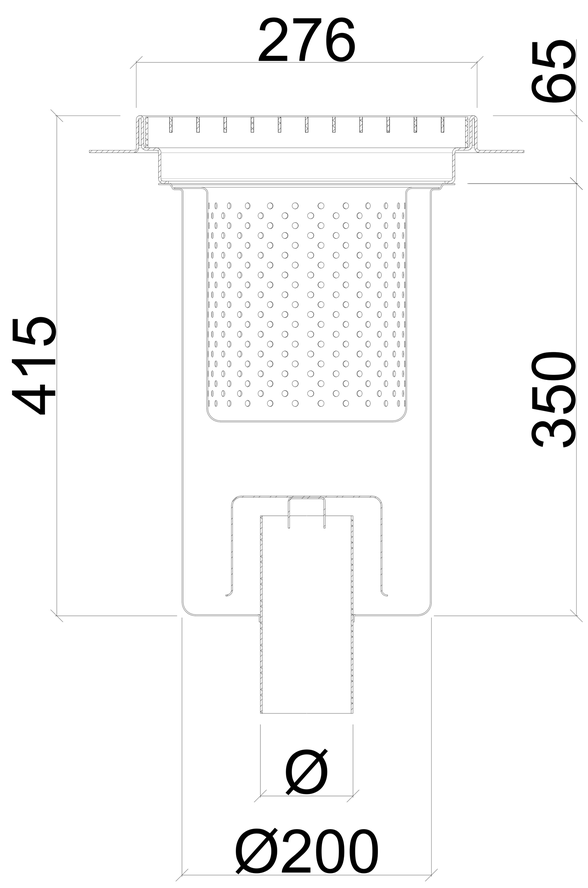

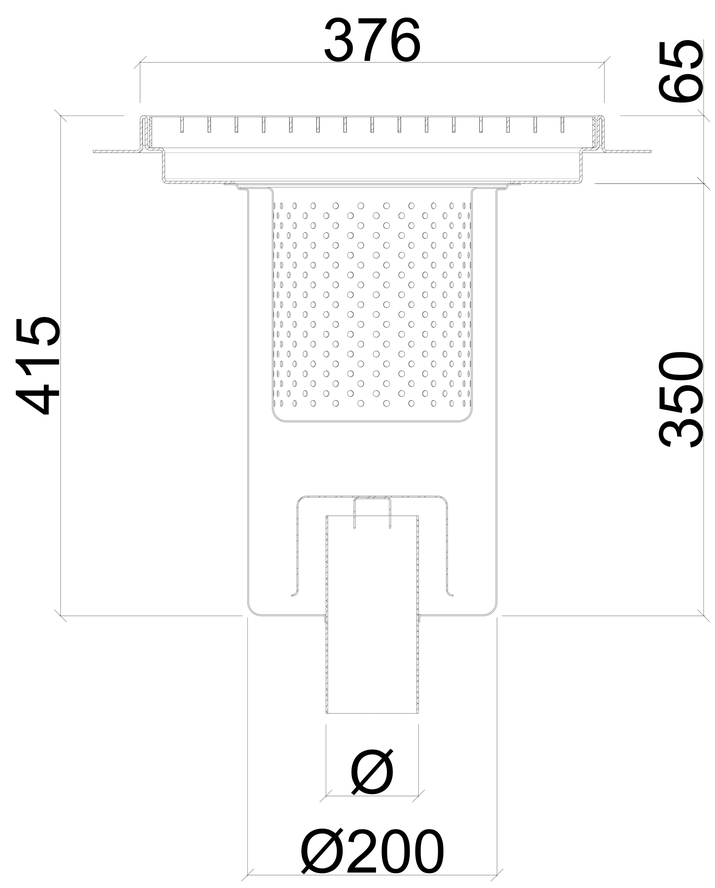

FENICROM®

APPLICATION DRAWING

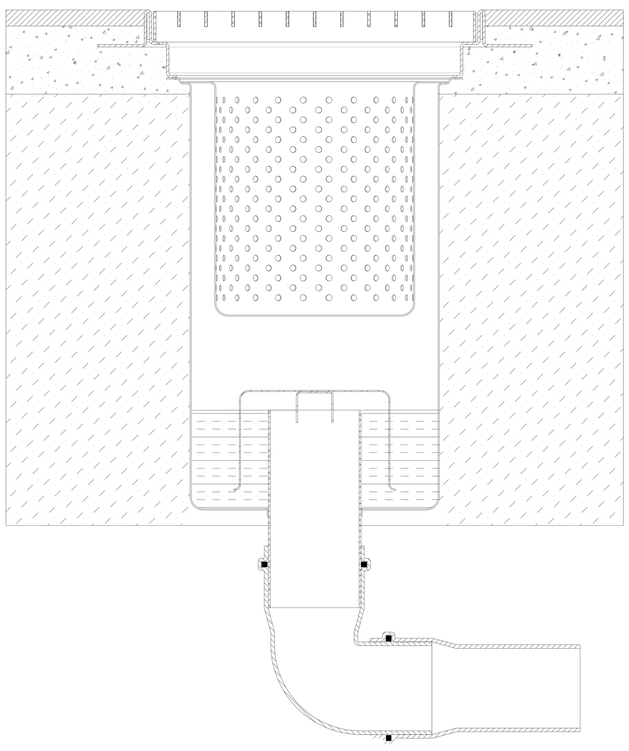
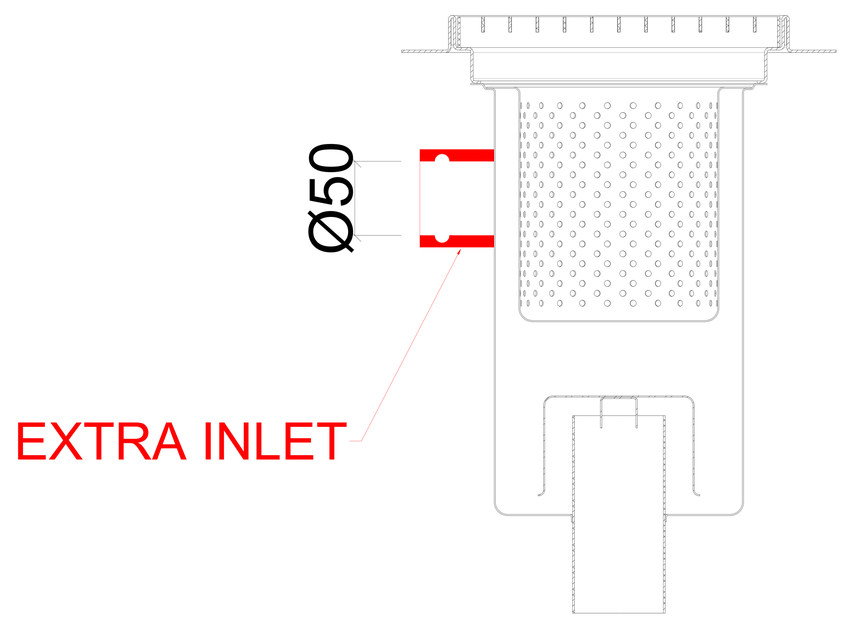
OPTIONAL