LOW TYPE			
MODEL	W x L	Ø	
		DN50	DN70
LTDAG-33	300 x 300	Ø50	Ø75
Max. Flow Rate lt / min		50	50
Waterseal Height		50mm	

DEEP TYPE			
MODEL	W x L	Ø	
		DN50	DN70
LTDAG-D-33	300 x 300	Ø50	Ø75
Max. Flow Rate lt / min		50	50
Waterseal Height		60mm	

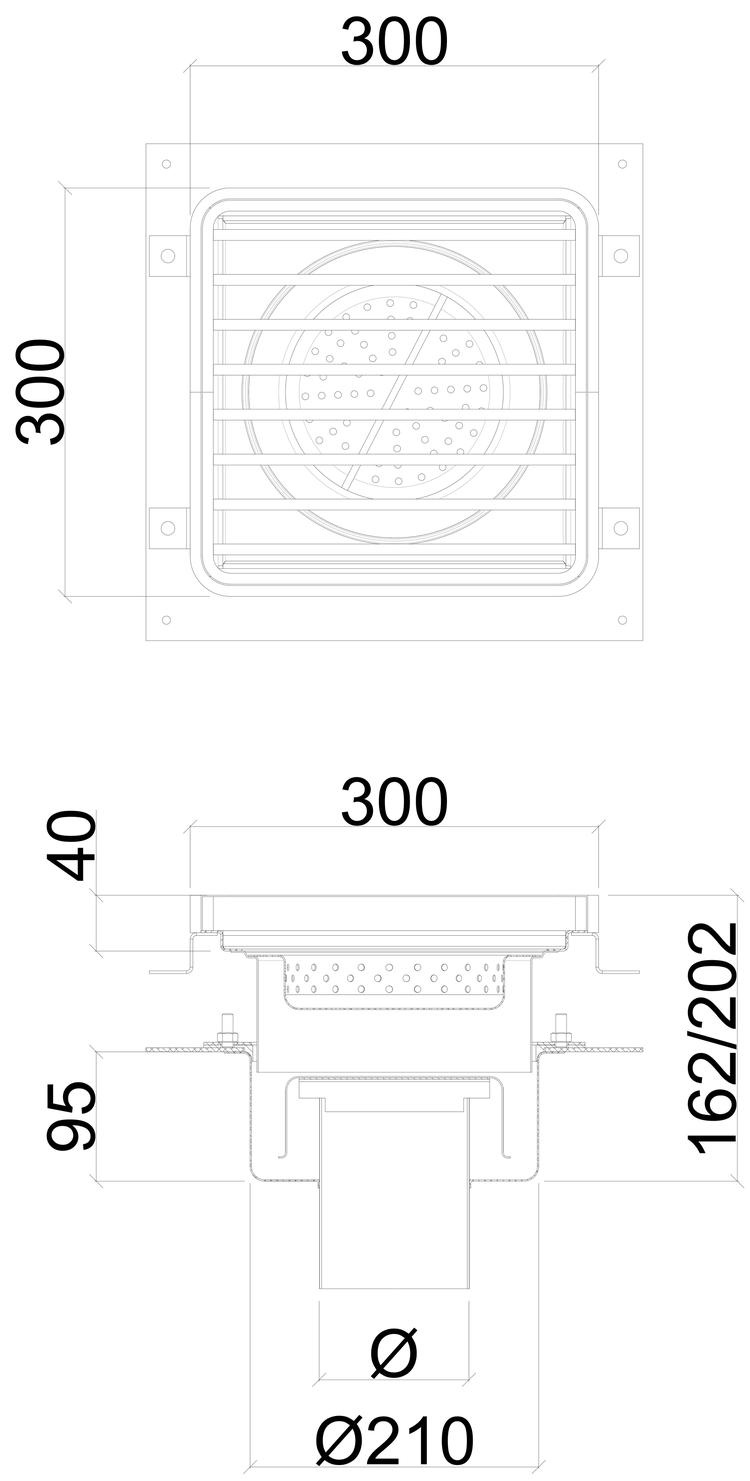

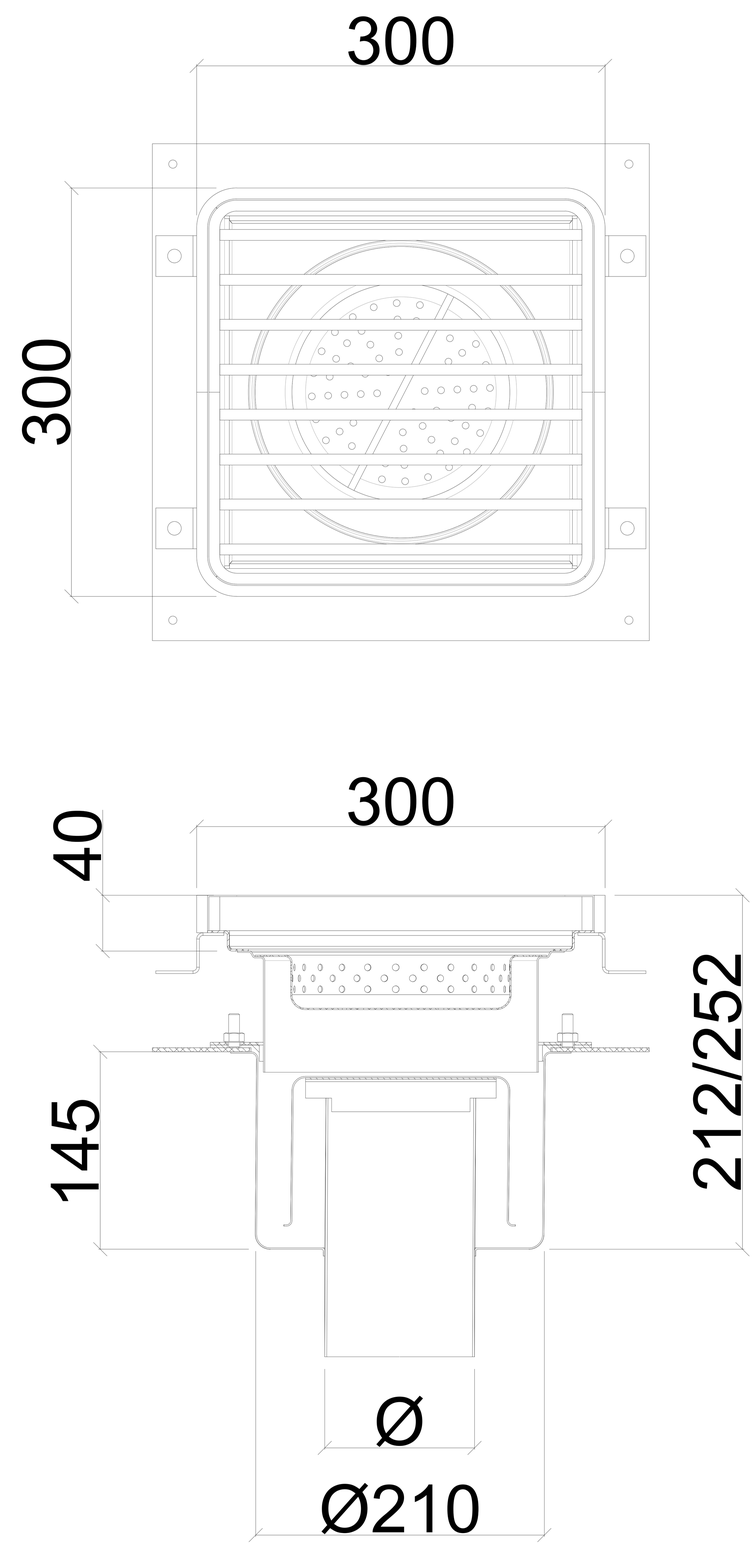

FENICROM®

APPLICATION DRAWING

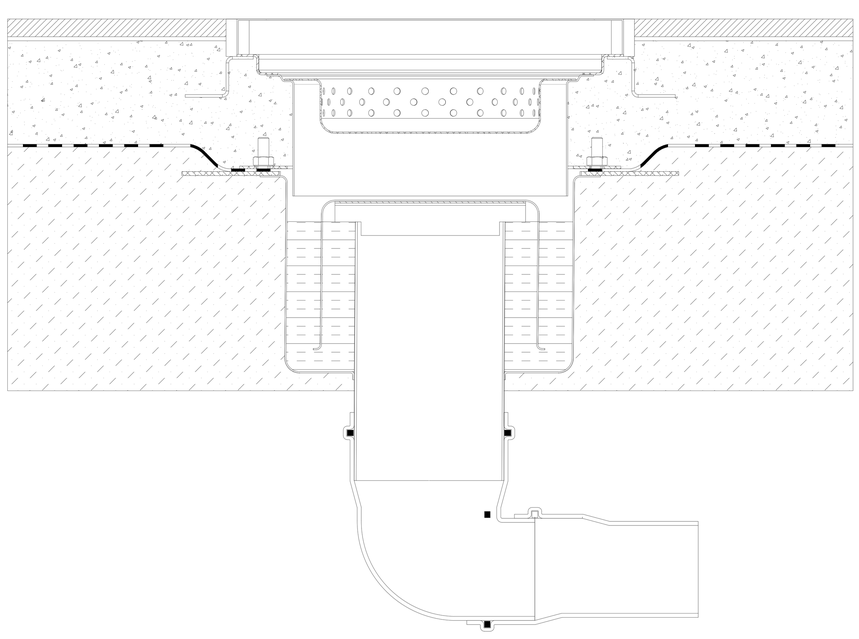
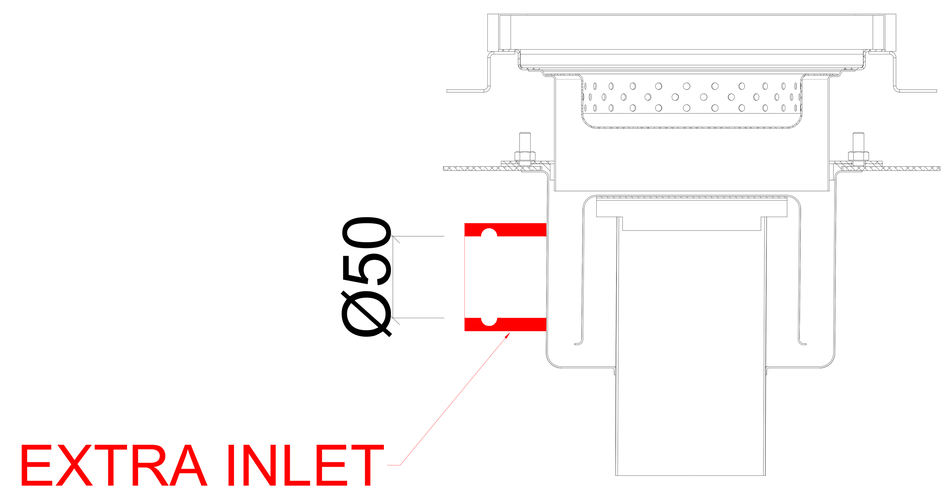
OPTIONAL