DEEP TYPE

MODEL	W x L	Ø		S	H
		DN50	DN70	5	120
PAG-D-22K	220 x 220	Ø50	Ø75	8	123
Max. Flow Rate lt / min		50	50		
Waterseal Height		60mm		10	125

DEEP TYPE

MODEL	W x L	Ø			S	H
		DN50	DN70	DN100	5	150
PAG-D-33K	295 x 295	Ø50	Ø75	Ø110	8	153
Max. Flow Rate lt / min		50	50	70		
Waterseal Height		60mm			10	155

DEEP TYPE

MODEL	W x L	Ø			S	H
		DN100	DN125	DN150	5	150
PAG-D-44K	400 x 400	Ø110	Ø125	Ø160	8	153
Max. Flow Rate lt / min		70	100	125		
Waterseal Height		60mm			10	155

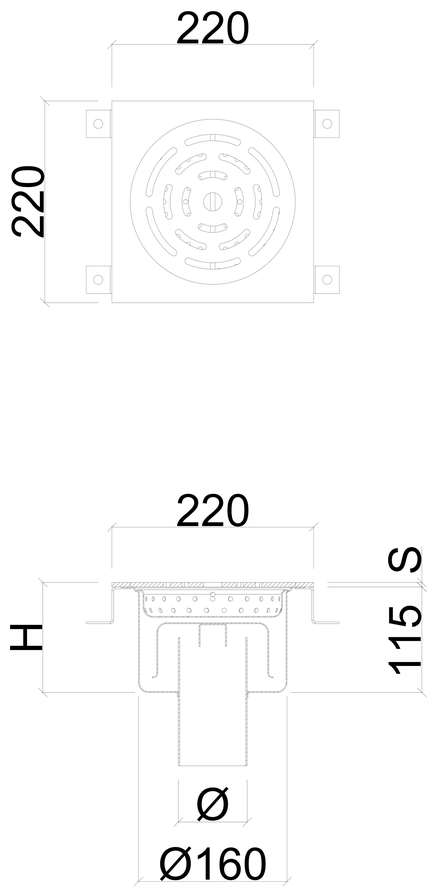

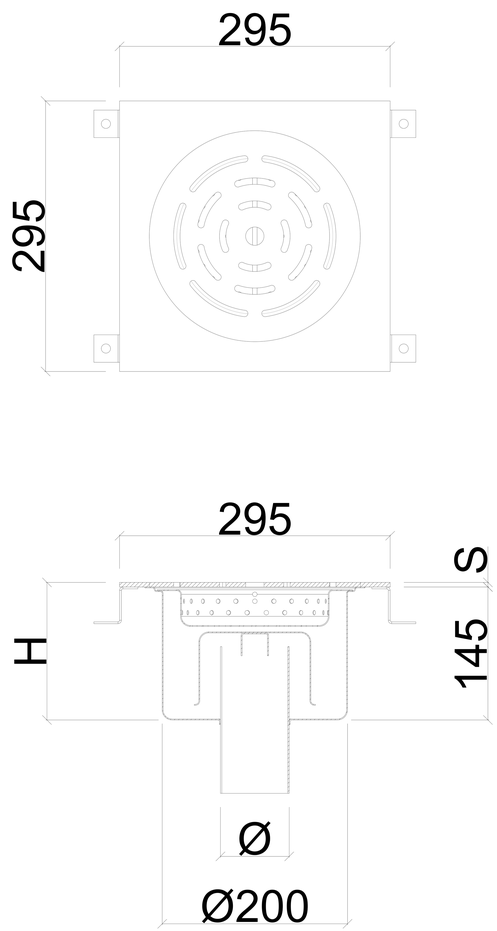

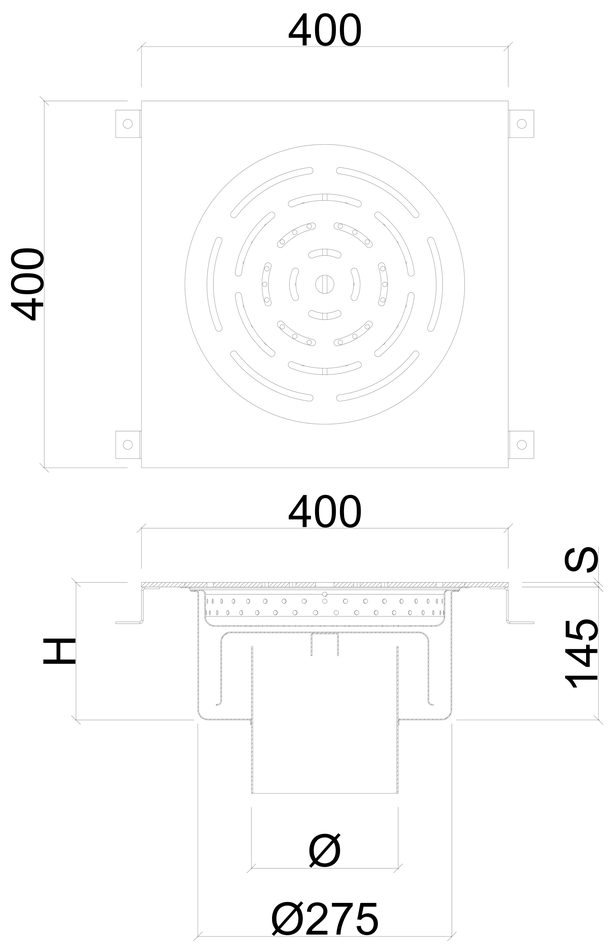

APPLICATION DRAWING

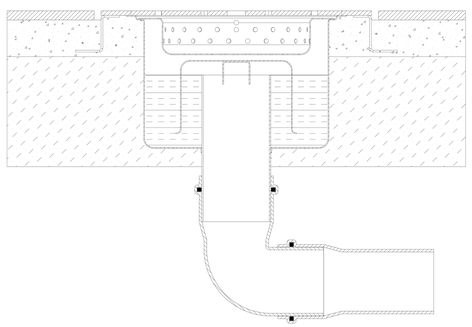

OPTIONAL

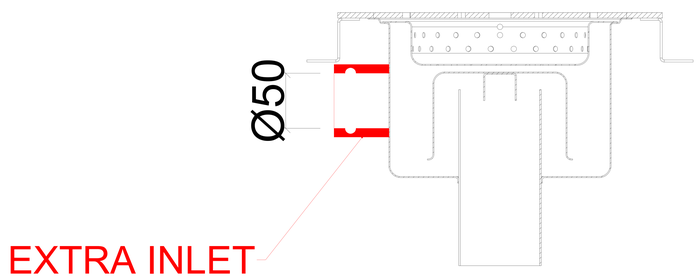

FENICROM®