LOW TYPE

MODEL	W x L	Ø		S	H
		DN50	DN70	5	100
PAG-22K	220 x 220	Ø50	Ø75	8	103
Max. Flow Rate lt / min		50	50		
Waterseal Height		50mm		10	105

LOW TYPE

MODEL	W x L	Ø			S	H
		DN50	DN70	DN100	5	100
PAG-33K	295 x 295	Ø50	Ø75	Ø110	8	103
Max. Flow Rate lt / min		50	50	70		
Waterseal Height		50mm			10	105

LOW TYPE

MODEL	W x L	Ø			S	H
		DN100	DN125	DN150	5	100
PAG-44K	400 x 400	Ø110	Ø125	Ø160	8	103
Max. Flow Rate lt / min		70	100	125		
Waterseal Height		50mm			10	105

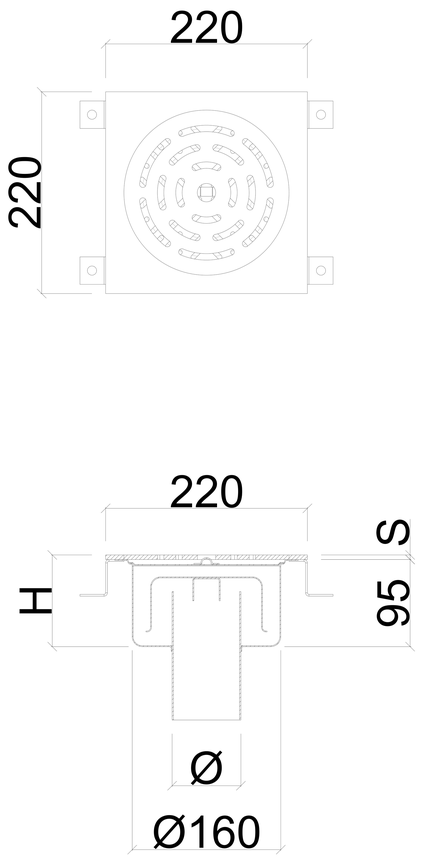

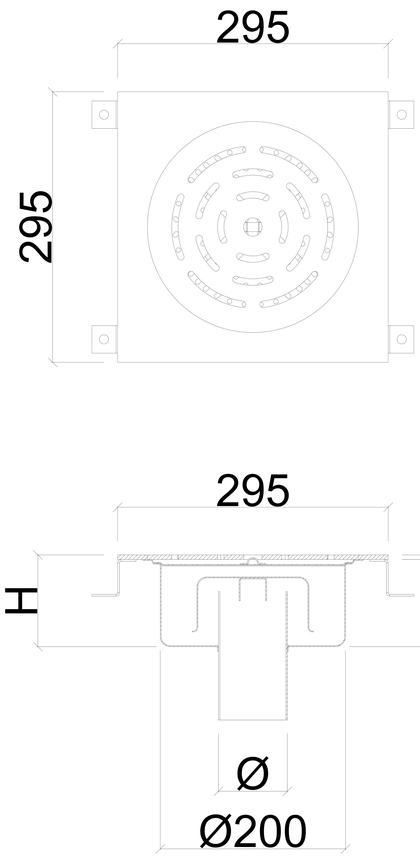

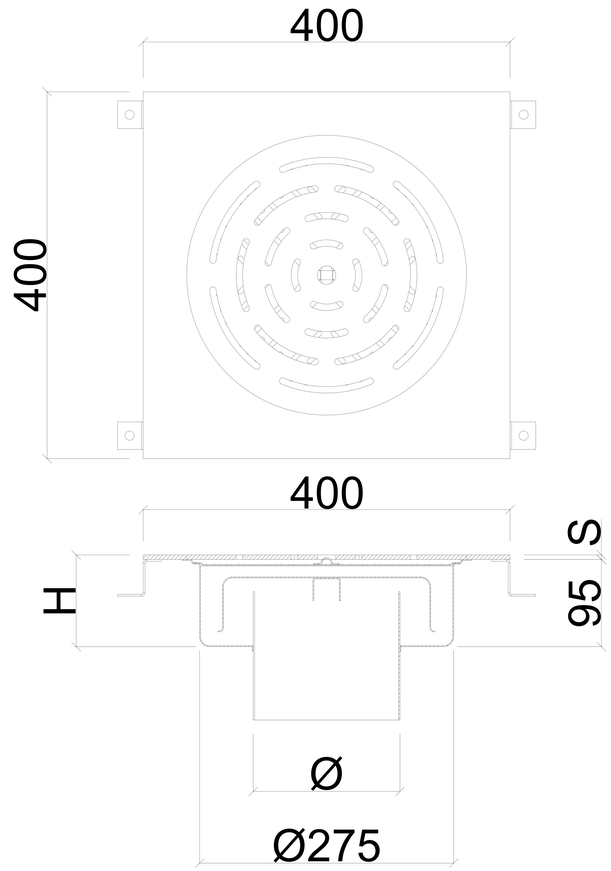

APPLICATION DRAWING

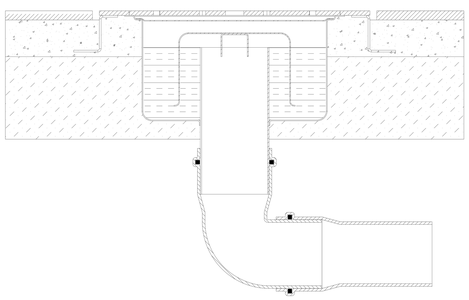

OPTIONAL

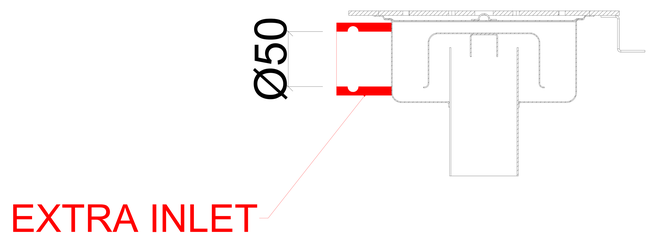

FENICROM®