CHANNEL TYPE: SPK-3AG-300 BOTTOM OUTLET
SPK-3YG-300 SIDE OUTLET

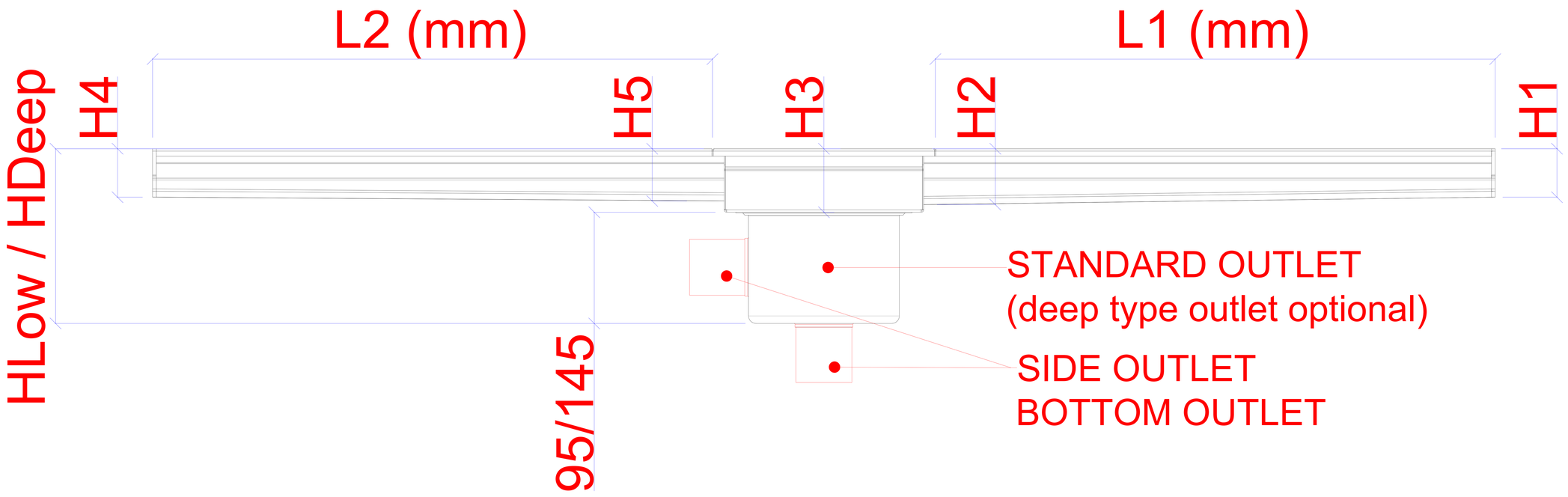

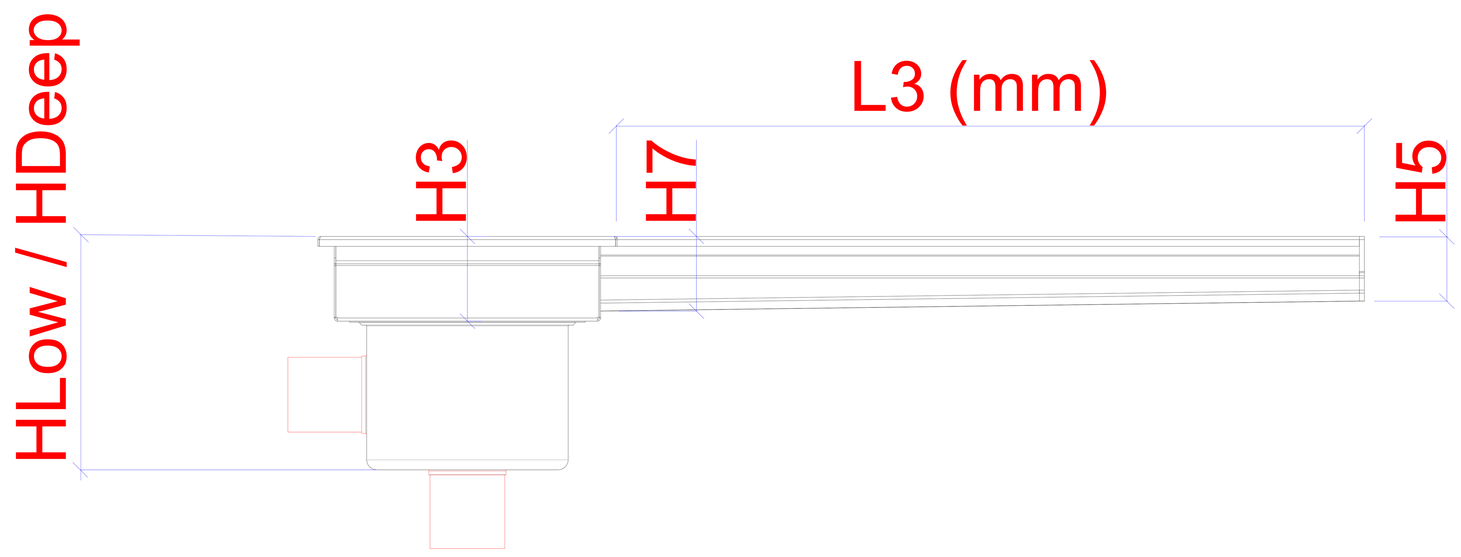

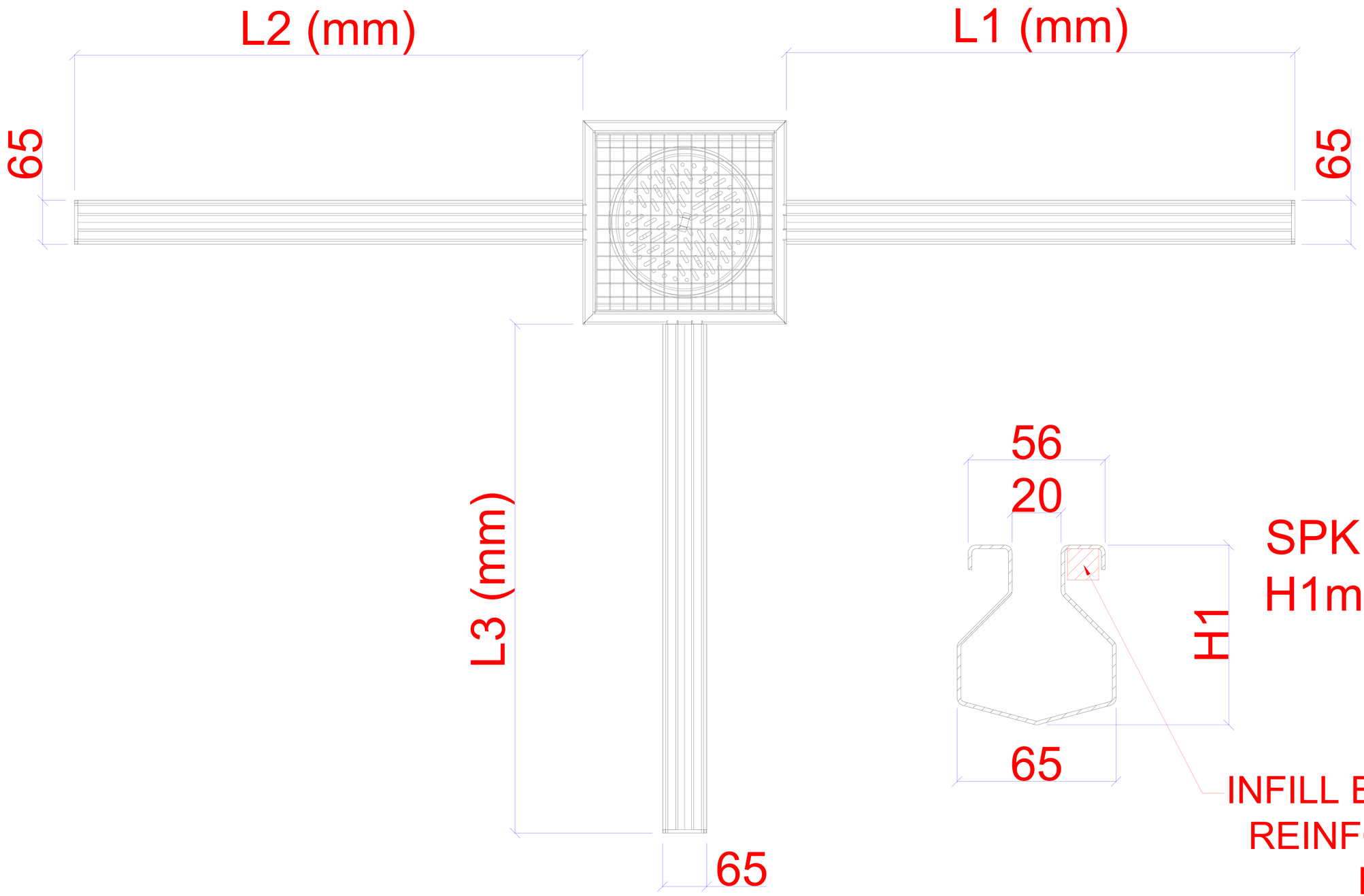

SPK
H1min:65mm

INFILL ELEMENT FOR REINFORCING THE FRAME (OPTIONAL)

FENICROM®