CHANNEL TYPE: SPK-KAG BOTTOM OUTLET
SPK-KYG SIDE OUTLET

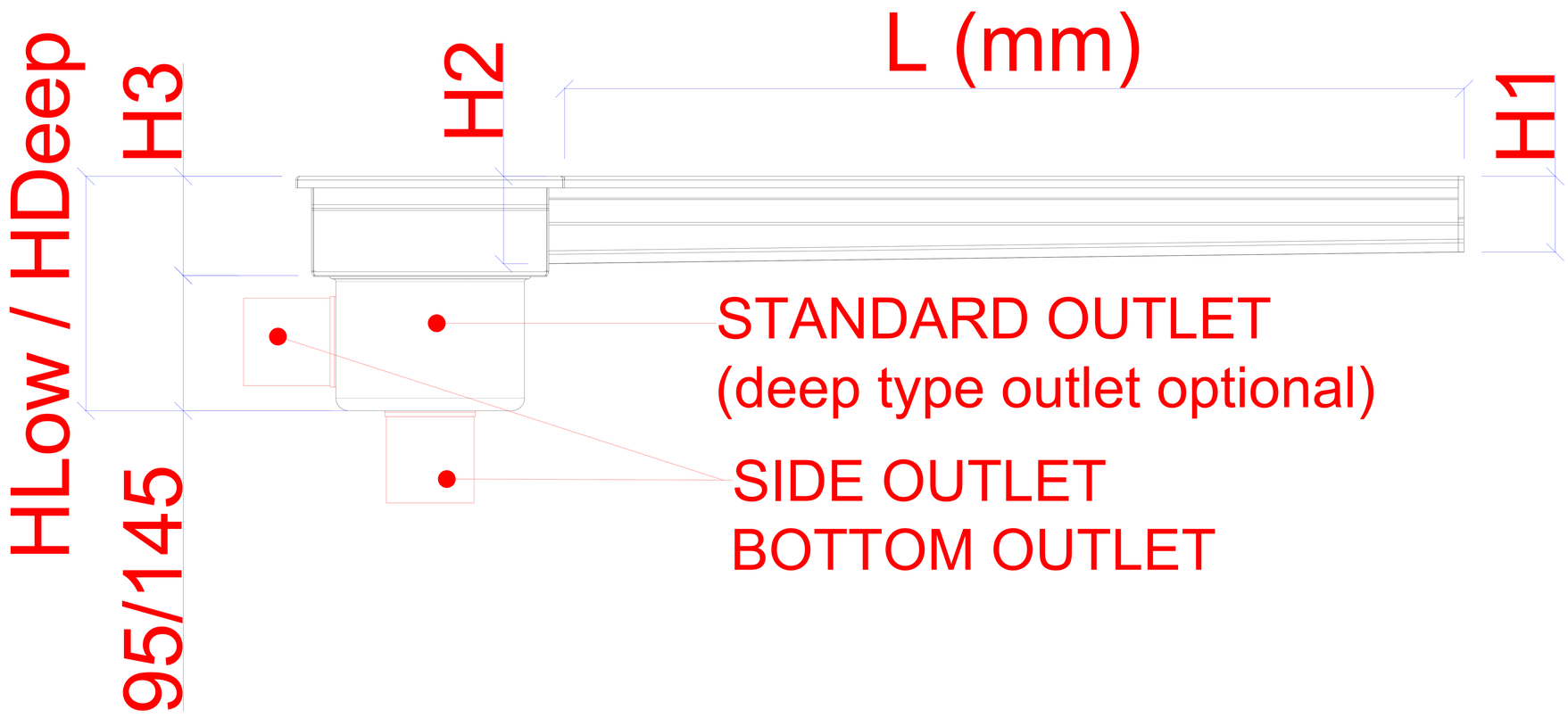

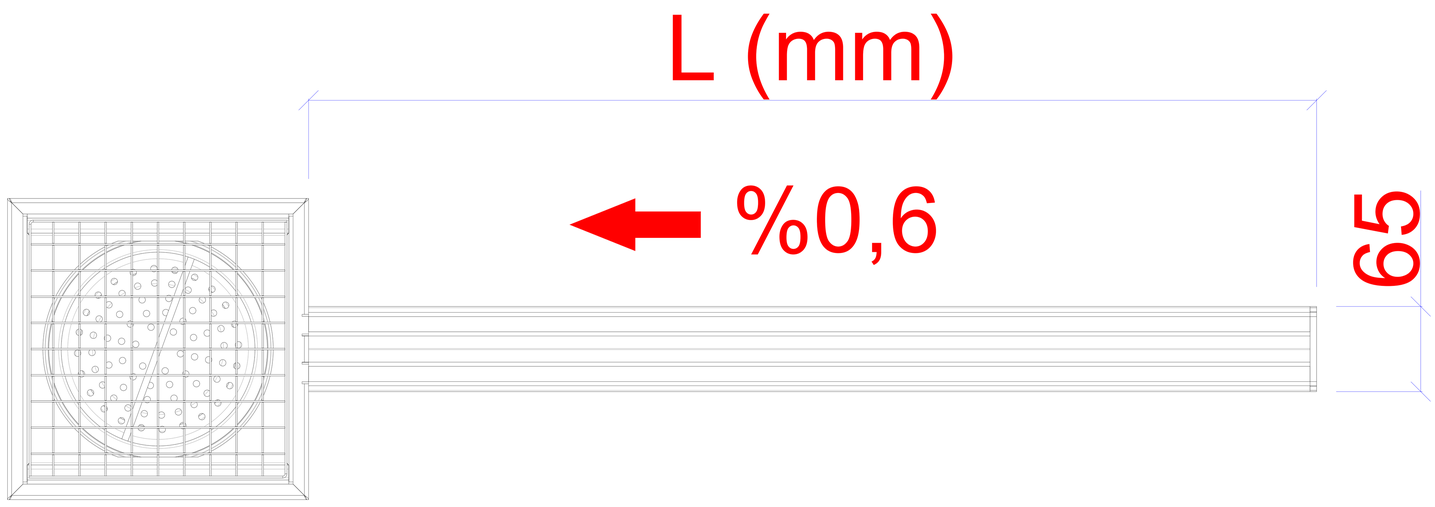

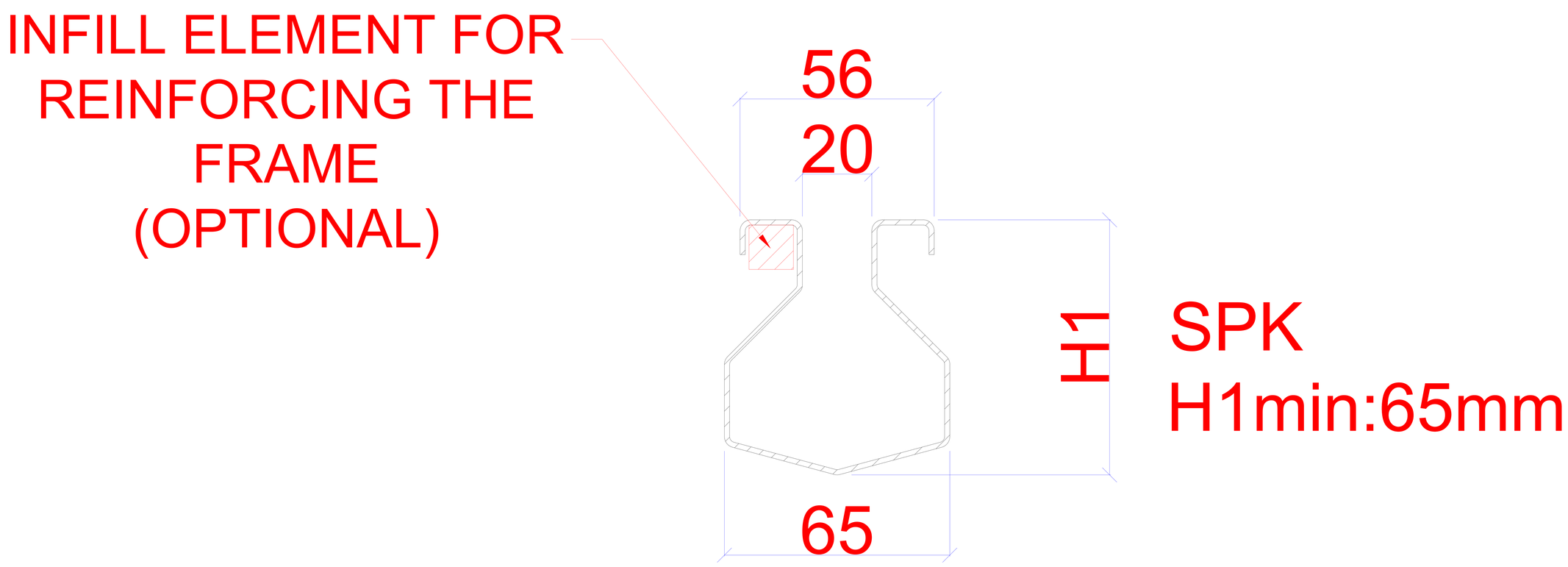

FENICROM®