DEEP TYPE			
MODEL	W x L	Ø	
		DN50	DN70
TIAG-D-22	226 x 226	Ø50	Ø75
Max. Flow Rate lt / min		50	50
Waterseal Height		50mm	

DEEP TYPE				
MODEL	W x L	Ø		
		DN50	DN70	DN100
TIAG-D-33	276 x 276	Ø50	Ø75	Ø110
Max. Flow Rate lt / min		50	50	70
Waterseal Height		60mm		

DEEP TYPE				
MODEL	W x L	Ø		
		DN50	DN70	DN100
TIAG-D-44	376 x 376	Ø50	Ø75	Ø110
Max. Flow Rate lt / min		50	50	70
Waterseal Height		60mm		

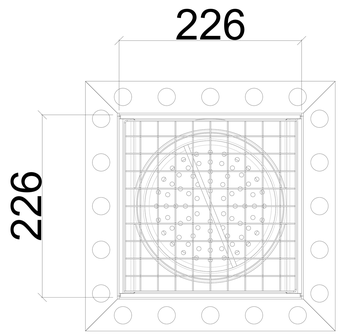

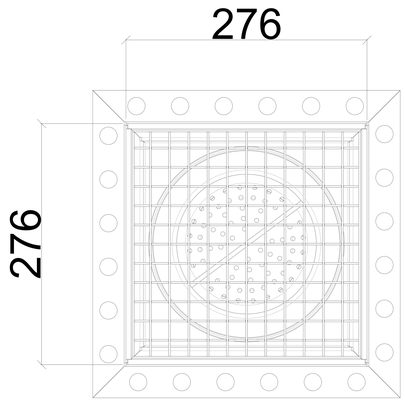

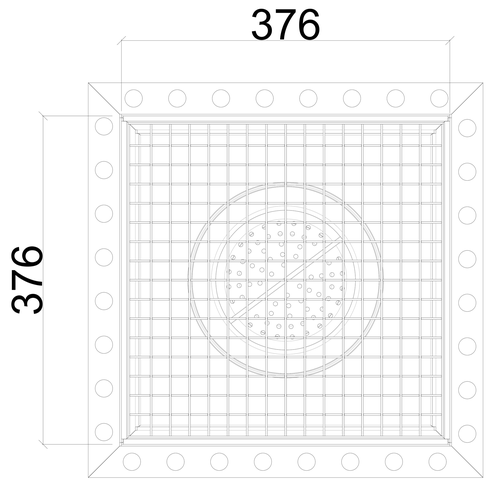

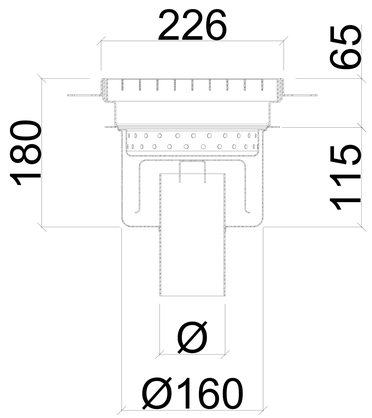

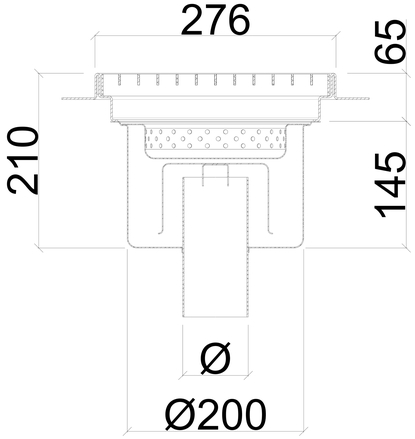

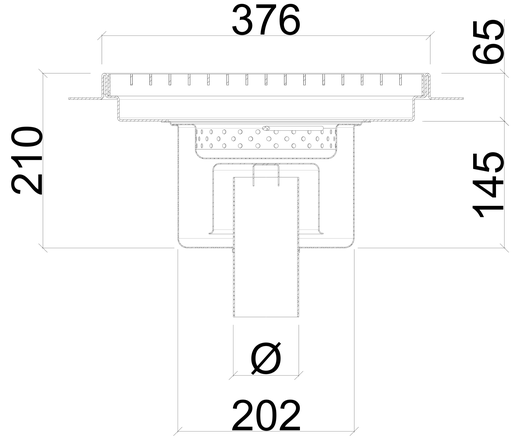

APPLICATION DRAWING

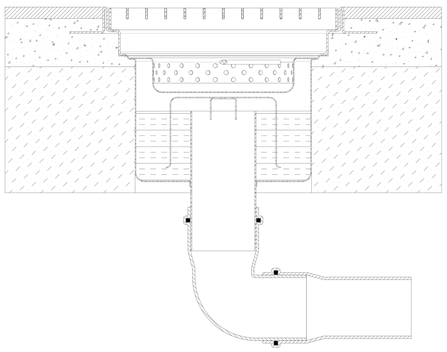

OPTIONAL

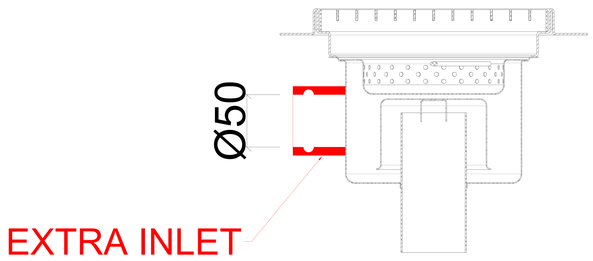

FENICROM®