DEEP TYPE

MODEL	W x L	Ø		S	H
		DN50	DN70	5	152/192
PDAG-D-22C	Ø220	Ø50	Ø75	8	155/195
Max. Flow Rate lt / min		50	50		
Waterseal Height		50mm		10	157/197

DEEP TYPE

MODEL	W x L	Ø			S	H
		DN50	DN70	DN100	5	182/222
PDAG-D-30C	Ø295	Ø50	Ø75	Ø110	8	185/225
Max. Flow Rate lt / min		50	50	70		
Waterseal Height		50mm			10	187/227

DEEP TYPE

MODEL	W x L	Ø			S	H
		DN100	DN125	DN150	5	182/222
PDAG-D-40C	Ø400	Ø110	Ø125	Ø160	8	185/225
Max. Flow Rate lt / min		70	100	125		
Waterseal Height		50mm			10	187/227

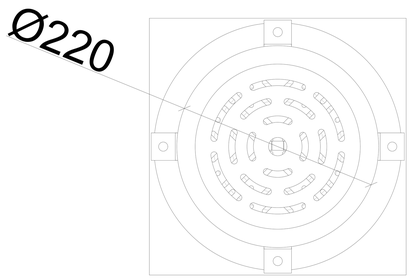

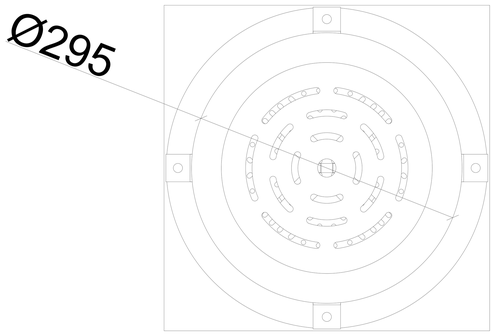

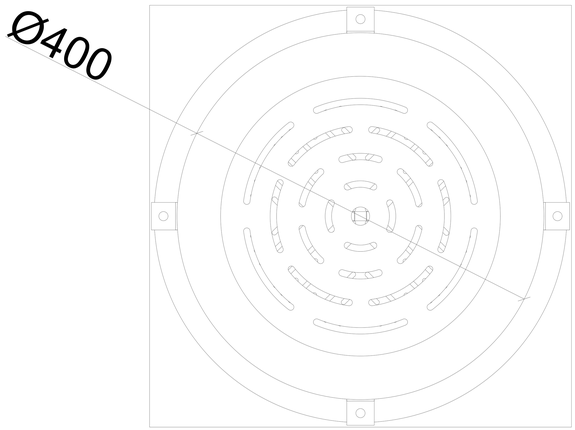

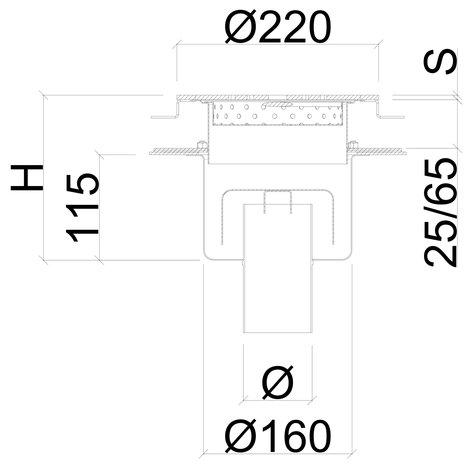

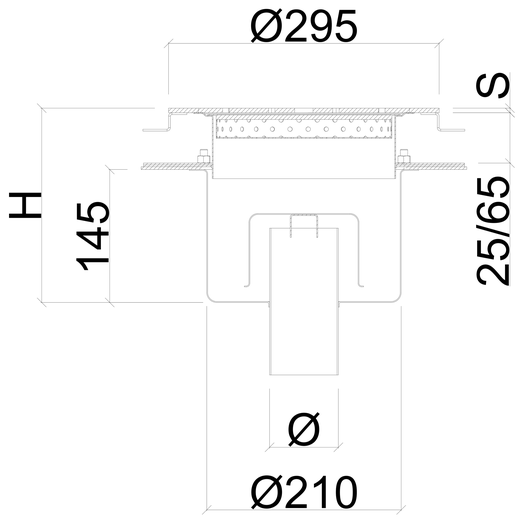

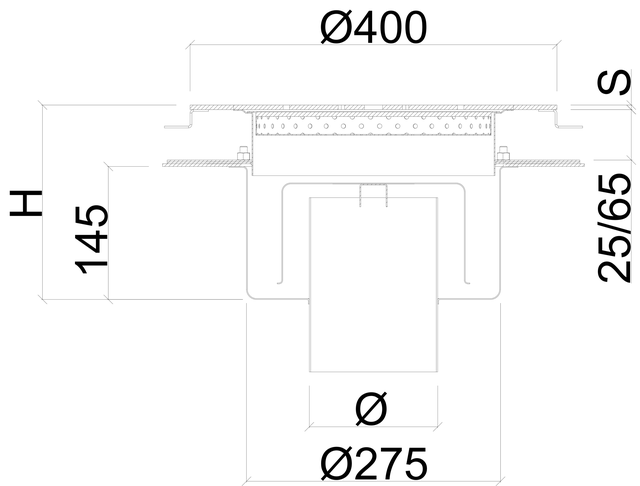

APPLICATION DRAWING

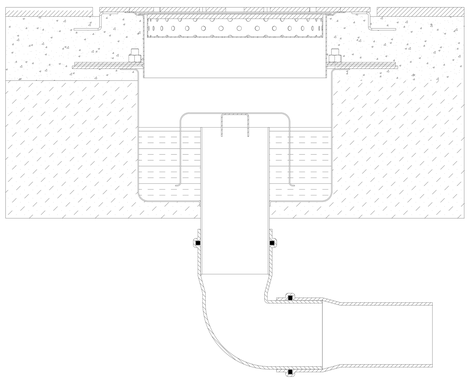

OPTIONAL

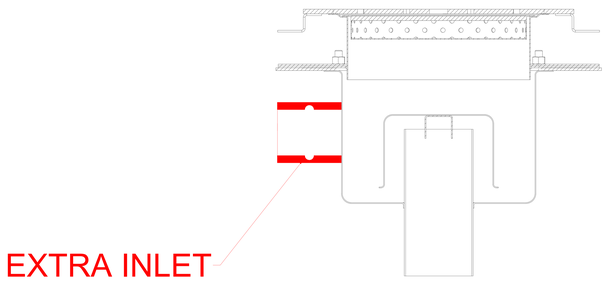

FENICROM®